User Manual

OLCT 10N

Digital Gas Detector

OFFICIAL DISTRIBUTOR
GazDetect
contact@gazdetect.com
+33 (0)1.64.09.35.16

Part Number: NPO10NEN
Version: H.1

OLDHAM
The Fixed Gas Detection Experts

Copyright © 2015 by OLDHAM S.A.S

December 2015

All rights reserved. No reproduction of all or part of this document, in any form, is permitted without the written consent of OLDHAM S.A.S.

All information provided in this document is accurate to the best of our knowledge.

As a result of continuous research and development, the specifications of this product may be changed without prior notice.

OLDHAM S.A.S
Rue Orfila
Z.I. Est – CS 20417
F – 62027 ARRAS Cedex
Tel: +33 (0)3 21 60 80 80
Fax: +33 (0)3 21 60 80 00

Contents

Chapter 1 | Overview 7
Purpose 7
Composition of the Detector Assembly 7
Type of detector available 8

Chapter 2 | Installation 9
Regulations and conditions of use 9
Location of the detector 9
Detector positioning 9
Connection 10
Configuration of communication 12
Scope of use 14

Chapter 3 | Maintenance 15
Maintenance Frequency 15
Semi-automatic calibration 16
Sensor replacement 18
Manual calibration 20

Chapter 5 | Spare Parts 25

Chapter 6 | EC Declaration 27

Chapter 7 | Specifications 29
Detector 29
Sensor specifications 30
Line length (use with MX 43) 32

Chapter 8 | Specific instructions for use in explosive atmospheres in accordance with European ATEX Directive 94/9/EC 35
General comments 35
Marking for LEL versions 35
Marking for toxic gas or oxygen detector versions 36

Thank you for choosing this OLDHAM instrument.

All necessary actions have been taken to ensure your complete satisfaction with this equipment.

It is important that you read this entire manual carefully and thoroughly.

Limitation of Liability

- OLDHAM shall not be held responsible for any damage to the equipment or for any physical injury or death resulting in whole or in part from the inappropriate use or installation of the equipment, non-compliance with any and all instructions, warnings, standards and/or regulations in force.
- No business, person or legal entity may assume responsibility on behalf of OLDHAM, even though they may be involved in the sale of OLDHAM products.
- OLDHAM shall not be responsible for any direct or indirect damage, or any direct or indirect consequence, resulting from the sale and use of any of its products **UNLESS SUCH PRODUCTS HAVE BEEN SELECTED BY OLDHAM ACCORDING TO THE APPLICATION.**

Ownership clauses

- The drawings, specifications, and information herein contain confidential information that is the property of OLDHAM.
- This information shall not, either in whole or in part, by physical, electronic, or any other means whatsoever, be reproduced, copied, divulged, translated, or used as the basis for the manufacture or sale of OLDHAM equipment, or for any other reason **without the prior written consent of OLDHAM**.

Warnings

- This is not a contractual document. **OLDHAM** reserves the right to alter the technical features of its equipment at any time and for any reason without prior notice.
- **READ THESE INSTRUCTIONS CAREFULLY BEFORE USING FOR THE FIRST TIME:** these instructions should be read by all persons who have or will have responsibility for the use, maintenance, or repair of the instrument.
- This instrument shall only be deemed to be in conformance with the published performance if used, maintained, and repaired in accordance with the instructions of OLDHAM, by OLDHAM personnel, or by personnel authorized by OLDHAM.

Warranty

- Under normal conditions of use and on return to the factory, parts and workmanship are guaranteed for 2 years, excluding consumables such as sensors, filters, etc.

Destruction of equipment

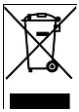

European Union only. This symbol indicates that, in conformity with directive DEEE (2002/96/CE) and in accordance with local regulations, this product must not be discarded with household waste.

It must be disposed of in a collection area that is designated for this purpose, for example at a site that is officially designated for recycling of electrical and electronic equipment (EEE) or a point of exchange for authorized products in the event of the acquisition of a new product of the same type.

Chapter 1 | Overview

Purpose

The OLCT 10N is a digital detector designed to detect a particular gas, depending on the type of sensor used. This range of digital detectors is compatible only with the Oldham MX 43 controller.

Composition of the Detector Assembly

An OLCT 10N detector contains the following parts:

Rep.	Description
1.	Enclosure
2.	Cable gland
3.	PCB
4.	Sensor
5.	Terminal
6.	Gas input
7.	LED
8.	Cover

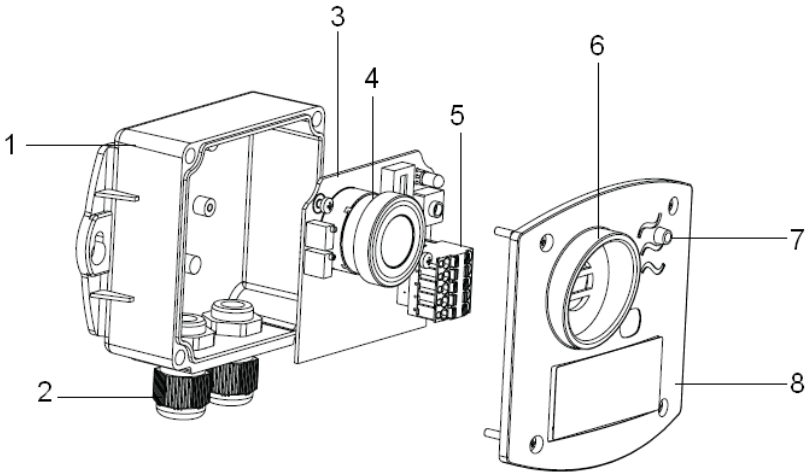

Figure 1: Component parts of an OLCT 10N

Type of detector available

Gas	Range
Methane (CH_4)	0-100% LEL (5% vol.) 0-100% LEL (4.4% vol.)
Hydrogen (H_2)	0-100% LEL (4% vol.)
Butane (C_4H_{10})	0-100% LEL (1,5% vol.)
Propane (C_3H_8)	0-100% LEL (2% vol.)
Oxygen (O_2)	0-30% vol.
Carbone monoxide (CO)	0-300 ppm 0-1000 ppm
Carbon dioxide (CO_2)	0-5000ppm 0-5%vol. 0-100% vol.
Hydrogen sulfide (H_2S)	0-30 ppm 0-100 ppm
Nitrogen monoxide (NO)	0-100 ppm 0-300 ppm
Nitrogen dioxide (NO_2)	0-10 ppm 0-30 ppm
Ammonia (NH_3)	0-100 ppm 0-1000 ppm

Chapter 2 | Installation

Please read the guides on the installation, use and maintenance of flammable gas and oxygen detectors (standard EN/IEC 60079-29-2) and toxic gas detectors (standard EN 45544-4).

Regulations and conditions of use

- Where applicable, the installation should meet all the regulations currently in force for installations in explosive atmospheres, in particular standards IEC/EN 60079-14 and IEC/EN 60079-17 (current editions).
- Generally speaking, the ambient temperatures, supply voltages and power outputs that are mentioned in this document relate to explosion safety. **They do not relate to the detector's operating temperatures.**
- The equipment is authorized for use in ATEX zones 2 and 22 at ambient temperatures between -20°C and +55°C.
- The sensor in the transmitter should always be in contact with ambient air. Therefore:
  - Do not cover the detector
  - Do not paint the detector
  - Avoid dust
- The OLCT 10N may be used only with the OLDHAM MX 43 measurement and alarm controller.

CO_2 versions are not certified to use in ATEX area

Location of the detector

Depending on the density of the gas to be detected or the application, the detector shall be positioned at ground level, or on the ceiling at the same height as the airflow, or near air extraction ducts. Heavy gases may be detected at the ground level, while light gases will be found at ceiling height.

Detector positioning

The detectors shall preferably be positioned in an accessible place to facilitate inspection and maintenance as well as ensure the safety of the operators. The detectors shall be protected against shock hazards and must not be obstructed by

anything that will prevent them from measuring the ambient environment for which they are intended.

The detector shall be installed with the cable gland pointing downwards. If installed at an angle of more than 45° from the vertical or in a horizontal position (ceiling-type installation), the detector will not measure correctly and will need to be re-calibrated.

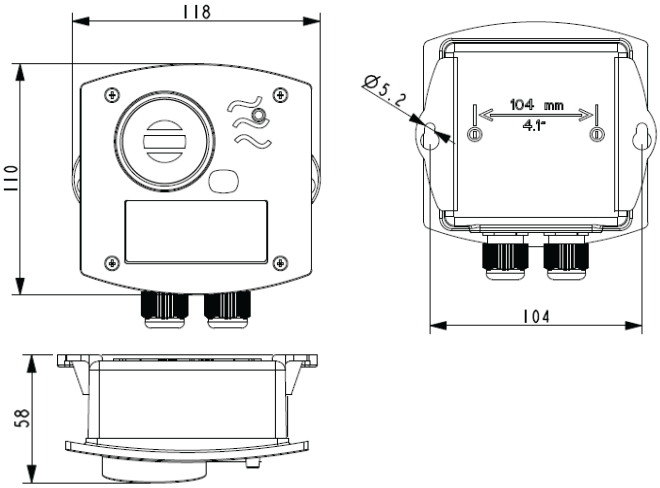

Figure 2: OLCT 10N dimensions (in millimeters)

Connection

As a reminder, the OLCT 10N can only be connected to the OLDHAM MX 43 controller.

RS485 transmission

The OLCT 10N has 2 cable glands that are used for the input cable and the output cable to the next module.

The detectors must be connected using MPI-22A cable type, minimum core size is 0.22 mm² (RS485 cable with 2 shielded twisted pairs, nominal impedance of 100 Ohm). This cable carries the RS485 signal on one pair and the power supply for the modules on the other pair. The +24VDC, 0V, A and B terminals are respectively connected to the +24VDC, 0V, A and B terminals of the other

modules in the line and then to the corresponding line connector of the MX 43 controller.

The cable shielding must be connected to a ground terminal.

The 120 Ω end-of-line resistor must be placed at the end of the line. This simply involves switch #8 being moved to the ON position on the last module (cf. Fig. 5).

No portion of the bare end of the terminal wires should be visible. For protection against any electromagnetic disturbances, the data as well as screen wires (or braids) must be cut as short as possible.

Before connecting the detector to the control unit, please disable any installation alarms to avoid unexpected triggering during operation.

The connection of the cable between the detector and controller should be made with the power off. The site should be at equal potential.

Connection is made according to the following schematic:

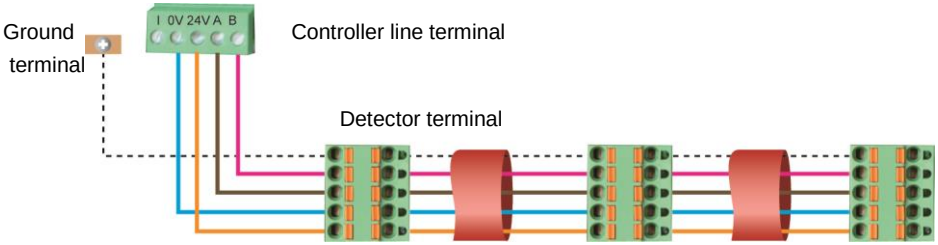

Figure 3: Schematic for connecting modules on a MX 43 line

Configuration of communication

Module address

All the digital modules on a line must be identified by a unique address.

Switches 1 to 5 of the configuration block of each module make it possible to establish an address number (1 to 32) in binary mode.

In the illustration to the right, the address 9 (10010) has been defined.

The *Addressing Table* below lists the possible combinations.

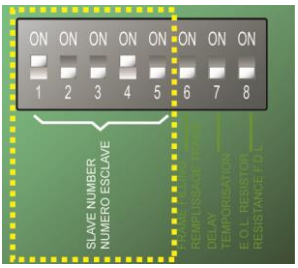

Figure 4: Switches for address configuration

Address module	Switches (ON = 1 ; OFF = 0)				
	1	2	3	4	5
1	1	0	0	0	0
2	0	1	0	0	0
3	1	1	0	0	0
4	0	0	1	0	0
5	1	0	1	0	0
6	0	1	1	0	0
7	1	1	1	0	0
8	0	0	0	1	0
9	1	0	0	1	0
10	0	1	0	1	0
11	1	1	0	1	0
12	0	0	1	1	0
13	1	0	1	1	0
14	0	1	1	1	0
15	1	1	1	1	0
16	0	0	0	0	1

Address module	Switches (ON = 1 ; OFF = 0)				
	1	2	3	4	5
17	1	0	0	0	1
18	0	1	0	0	1
19	1	1	0	0	1
20	0	0	1	0	1
21	1	0	1	0	1
22	0	1	1	0	1
23	1	1	1	0	1
24	0	0	0	1	1
25	1	0	0	1	1
26	0	1	0	1	1
27	1	1	0	1	1
28	0	0	1	1	1
29	1	0	1	1	1
30	0	1	1	1	1
31	1	1	1	1	1
32	0	0	0	0	0

Table 1: Addressing table (address depends on switch positions)

Remarks:

- During module replacement, all the configuration switches of a new module must be positioned in the same configuration as those of the previous module.
- Switch #6 (FRAME FILLING) must be set to OFF (unused option).
- Switch #7 (DELAY) must be set to ON.

End of line resistance

For the last detector, set switch #8 (EOL RESISTOR) to ON.

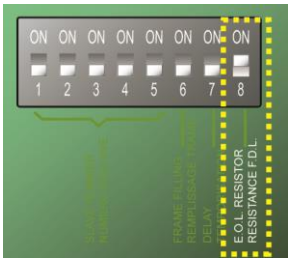

Figure 5: End of line resistor switch in position "ON"

Scope of use

The OLCT 10N may be used only with the OLDHAM MX 43 measurement and alarm controller.

The sensors have certain limitations; it is essential to fully recognize these limitations.

Presence of specific components

- Vapor from components containing silicone or sulfur can affect the catalytic sensors and thereby distort measurements. If sensors have been exposed to these types of compound, inspection or calibration will be necessary.

- High concentrations of organic solvents (e.g. alcohols, aromatic solvents, etc.) or exposure to quantities of gas greater than the specified range of measurement can damage the electrochemical sensors. Inspection or calibration is then recommended.

- In the presence of high concentrations of carbon dioxide (CO_2 > 1% vol.), the oxygen-measuring electrochemical sensors can slightly overestimate the concentration of oxygen (0.1 to 0.5% vol. O_2 overestimate).

Operation under low oxygen levels

- If an electrochemical sensor is used in an atmosphere containing less than 1% vol. oxygen for over one hour, the measurement may be an underestimate.

- If a catalytic sensor is used in an atmosphere containing less than 10% vol. oxygen, the measurement may be an underestimate.

Chapter 3 | Maintenance

Maintenance primarily involves sensor calibration and changing any sensors that no longer meet their initial performance characteristics.

Since they are liable to affect detection reliability, the tasks described in this chapter are reserved for authorized trained personnel only.

Inspection and maintenance shall be carried out in accordance with standard EN/IEC 60079-17. The instructions contained in the ATEX marking shall be observed (see Chapter 8).

When first powered up or after a sensor replacement, wait for 1 hour before performing a calibration.

It is impossible to calibrate an OLCT 10N within 10 minutes after a power cycle.

Maintenance Frequency

Gas detectors are safety devices. OLDHAM recommends the regular testing of fixed gas detection installations. This type of test consists of injecting the calibration gas into the detector at a sufficient concentration to activate the pre-set alarms. It is to be understood that this test is in no way a replacement for a detector calibration.

The frequency of gas tests depends on the industrial application where the detector is in use. Frequent inspections should be made in the months following the commissioning of the installation, and should then become more widely spaced provided that no significant deviation is observed. If a detector should fail to react in contact with the gas, calibration is essential. The frequency of calibrations shall be appropriate according to the results of the tests (humidity, temperature, dust, etc.); however, it must not exceed one year.

The general manager should put safety procedures in place on-site. OLDHAM cannot be held responsible for their enforcement.

The OLCT 10N can be calibrated either:

- **Manually**
- **Automatically**

The manual calibration must be done only after each sensor or detector replacement.

A manual calibration must be followed by an automatic calibration.

Please find below the different calibration gas concentrations.

Gas	Range	Calibration gas concentration
Methane (CH_4)	0-100% LEL (5% vol.) 0-100% LEL (4.4% vol.)	2.5% CH_4/Air (50% LEL) 2.2% CH_4/Air (50% LEL)
Hydrogen (H_2)	0-100% LEL	2.0% H_2/Air (50% LEL)
Butane (C_4H_{10})	0-100% LEL	0.9% C_4H_{10}/Air (60% LEL)
Propane (C_3H_8)	0-100% LEL	1.1% C_3H_8/Air (55% LEL)
Oxygen (O_2)	0-30% vol.	20.9% O_2
Carbone monoxide (CO)	0-300 ppm 0-1000 ppm	100 ppm CO 300 ppm CO
Carbone dioxide (CO_2)	0-5000 ppm 0-5% vol. 0-100% vol.	3000 ppm CO_2 2.5% CO_2 50% CO_2
Hydrogen sulfide (H_2S)	0-30 ppm 0-100 ppm	25 ppm H_2S 25 ppm H_2S
Nitrogen monoxide (NO)	0-100 ppm 0-300 ppm	50 ppm NO 50 ppm NO
Nitrogen dioxide (NO_2)	0-10 ppm 0-30 ppm	10 ppm NO_2 10 ppm NO_2
Ammonia (NH_3)	0-100 ppm 0-1000 ppm	100 ppm NH_3 1000 ppm NH_3

Semi-automatic calibration

While the OLCT 10N is calibrating, the MX 43 inhibits alarms triggered by the detector and displays a maintenance code. Up to 32 sensors can be calibrated at the same time.

Cal ON Attachment of gas injection device

Cal OFF Removal of gas injection device

LED sensor status

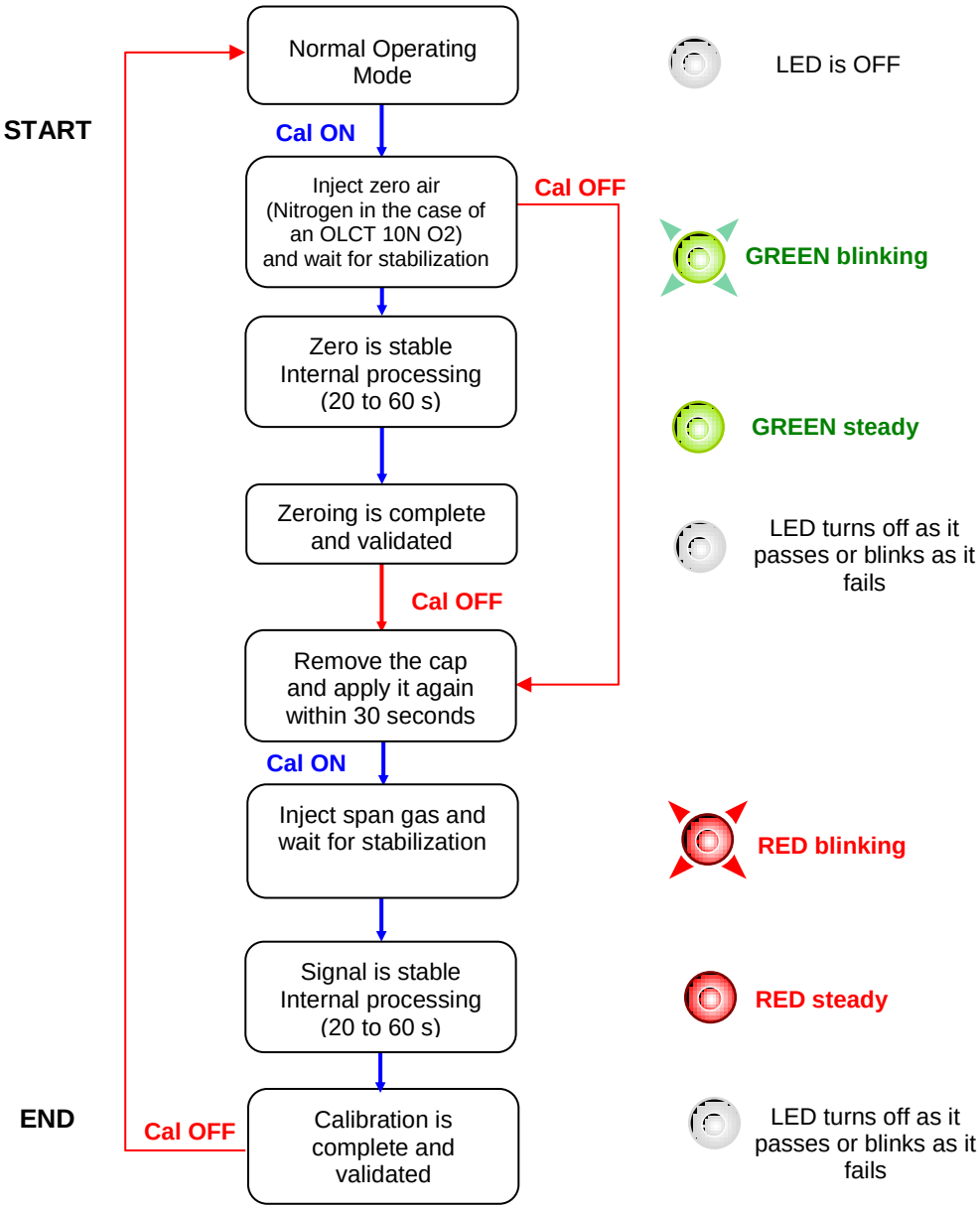

Semi-automatic calibration device (P/N 6331163)

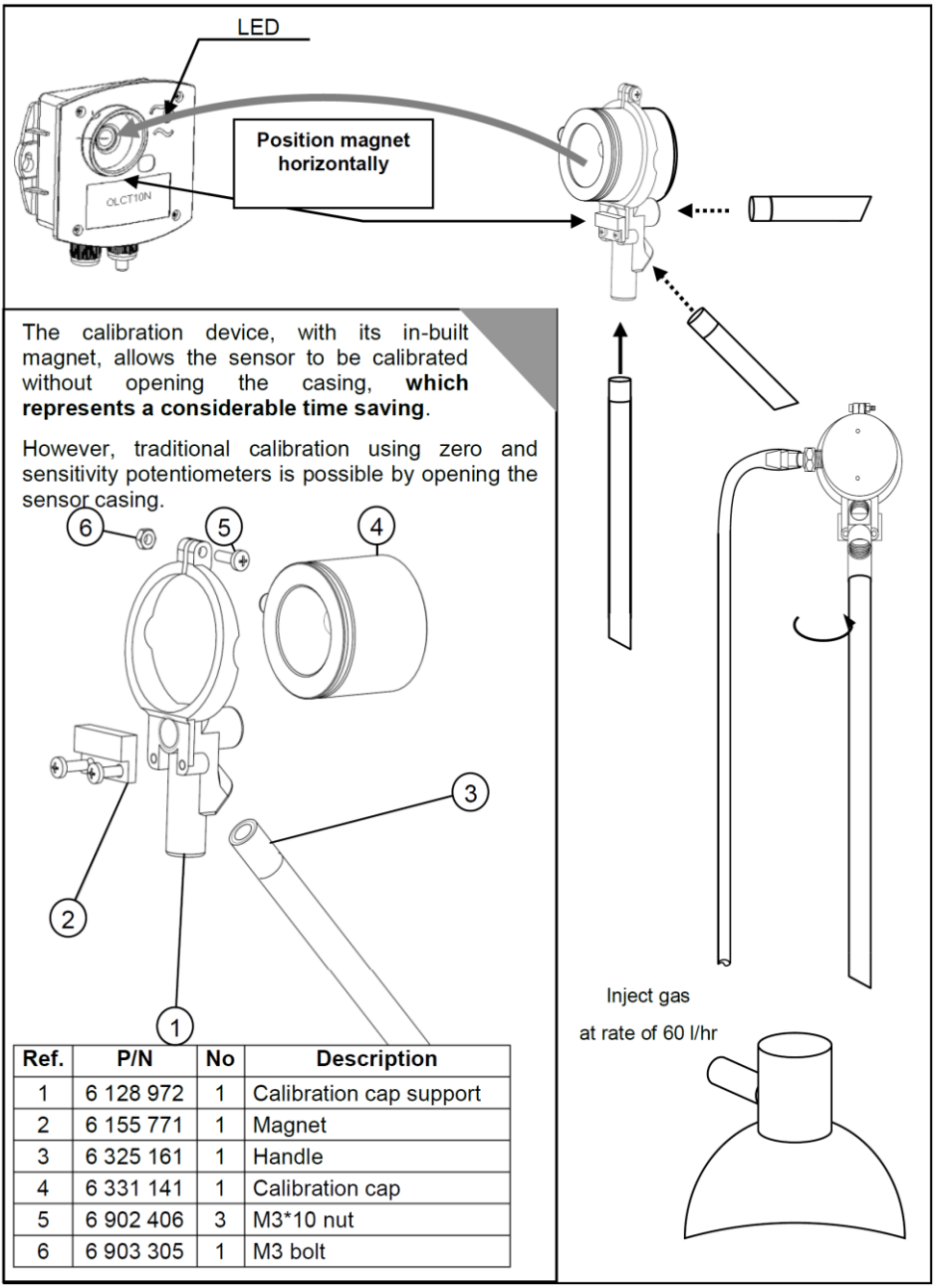

Ref.	P/N	No	Description
1	6 128 972	1	Calibration cap support
2	6 155 771	1	Magnet
3	6 325 161	1	Handle
4	6 331 141	1	Calibration cap
5	6 902 406	3	M3*10 nut
6	6 903 305	1	M3 bolt

Sensor replacement

Sensors should be replaced as a part of regular preventative maintenance or following a failed calibration test.

After a sensor replacement, both manual and automatic calibrations must to be conducted.

To change the sensor:

1. Remove the detector cover
2. Push and hold down the sensor replacement button (1) for 5 seconds until the solid green

LED (2) is on.

3. Release the button
4. Replace the sensor and conduct both manual and automatic calibrations (This is a mandatory step)

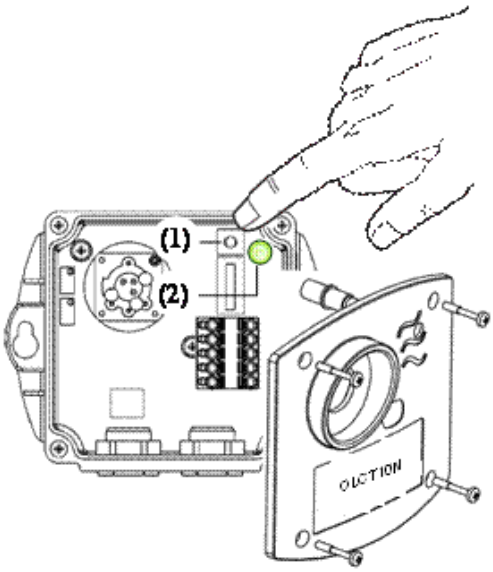

Figure 6: Sensor replacement

In order to comply with the ATEX rules, the sensor of LEL detectors is soldered to the card and cannot be changed separately. The entire OLCT 10N detector will need to be replaced. As the detector is factory calibrated, there is no point attempting manual calibration. However, a sensor change must be declared using the maintenance menu of the MX 43 controller (see MX 43 manual).

Manual calibration

A voltmeter and the female connector provided by Oldham (P/N 6116291) are required.

1. Remove the detector cover.
2. Connect the connector to the circuit's male connector
3. Connect the voltmeter between S+ and S- (value in mV)

Zero the sensor

1. Ensure that the sensor is in clean air (in absence of O2 in the case of OLCT 10N O2). If not, inject zero air (Nitrogen in the case of an OLCT 10N O2) into the sensor at a flow rate of 1 l/min, then wait for voltmeter signal to stabilize (use the calibration gas kit: zero air cylinder, calibration cap, tube).
2. Adjust the zero with the potentiometer's **ZERO** until the voltmeter reads 0 mV.

Sensitivity

1. Now inject the calibration gas (1 l/min) into the sensor. Wait for the voltmeter signal to stabilize (use the calibration gas kit: calibration gas cylinder, calibration cap, tube).
2. Adjust the sensitivity if necessary with the potentiometer "**SENS**" until the signal value (in mV) corresponds to the concentration in the reference gas used. **Use the following formula to calculate the correct value for the signal**.
3. Stop injecting gas (remove the calibration pipe from the sensor).
4. Wait for the voltmeter to "return to zero".

$$U\ (\text{mV}) = \frac{1600 \times \text{reference gas concentration}}{\text{measurement scale}}$$

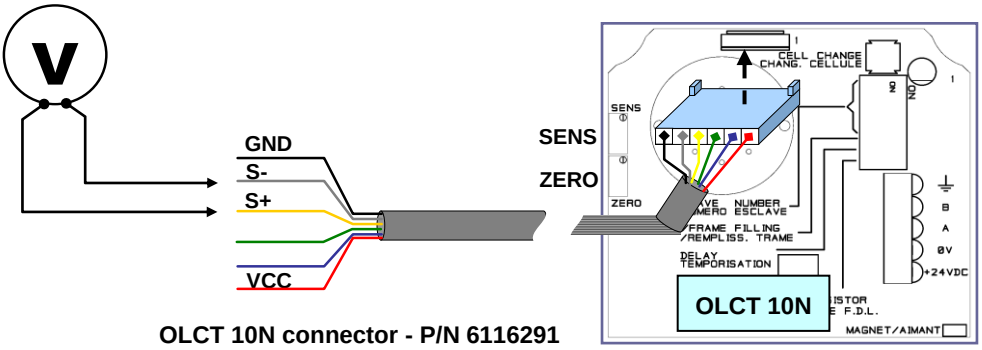

OLCT 10N connector - P/N 6116291

MAINTENANCE WIRES:

S- (grey) / S+ (yellow) = signal from 0 mV to 1600 mV for zero and sensitivity settings

GND (black) = circuit board ground

+VCC (**red**) = + power supply

Note: Blue and green wires are not used.

Chapter 4 | Part Numbers and Accessories

Part Number	Description
OLCT 10N-001	OLCT 10N Digital detector, range 0-100% LIE CH_4 (5% vol.)
OLCT 10N-002	OLCT 10N Digital detector, range 0-100% LIE CH_4 (4.4% vol.)
OLCT 10N-003	OLCT 10N Digital detector, range 0-100% LIE H_2 (4% vol.)
OLCT 10N-004	OLCT 10N Digital detector, range 0-100% LIE C_4H_{10} (1,5% vol.)
OLCT 10N-005	OLCT 10N Digital detector, range 0-100% LIE C_3H_8 (2% vol.)
OLCT 10N-200	OLCT 10N Digital detector, range 0-30% vol. O_2 (life expectancy 2 years)
OLCT 10N-272	OLCT 10N Digital detector, range 0-30% vol. O_2 (life expectancy 5 years)
OLCT 10N-204	OLCT 10N Digital detector, range 0-300 ppm CO
OLCT 10N-205	OLCT 10N Digital detector, range 0-1000 ppm CO
OLCT 10N-252	OLCT 10N Digital detector, range 0-5000 ppm CO_2
OLCT 10N-239	OLCT 10N Digital detector, range 0-5% vol. CO_2
OLCT 10N-241	OLCT 10N Digital detector, range 0-100% vol. CO_2
OLCT 10N-213	OLCT 10N Digital detector, range 0-30 ppm H_2S
OLCT 10N-214	OLCT 10N Digital detector, range 0-100 ppm H_2S
OLCT 10N-216	OLCT 10N Digital detector, range 0-100 ppm NO
OLCT 10N-217	OLCT 10N Digital detector, range 0-300 ppm NO
OLCT 10N-219	OLCT 10N Digital detector, range 0-10 ppm NO_2
OLCT 10N-220	OLCT 10N Digital detector, range 0-30 ppm NO_2
OLCT 10N-231	OLCT 10N Digital detector, range 0-100 ppm NH_3
OLCT 10N-232	OLCT 10N Digital detector, range 0-1000 ppm NH_3

Accessory	Description	Illustration	Part Number
Calibration kit	Kit containing pipe, automatic calibration cap and gas injection tube	Cf. Page 18	6331163

Chapter 5 | Spare Parts

Spare parts list for the different detectors.

Part Number	Description
6798301	CO sensor
6314196	CO_2 sensor - 5000ppm range
6314195	CO_2 sensor - 5% vol range
6314197	CO_2 sensor - 100% vol range
6313990	H_2S sensor
6314118	NH_3 sensor - 100 ppm range
6314119	NH_3 sensor - 1000 ppm range
6113331	NO sensor
6113332	NO_2 sensor
6799345	O_2 sensor (life expectancy 2 years)
6113720	O_2 sensor (life expectancy 5 years)

Chapter 6 | EC Declaration

DECLARATION DE CONFORMITE CONSTRUCTEUR
Manufacturer Declaration of Conformity

CE

La **Société Oldham S.A.S.**, ZI Est 62000 Arras France, atteste que le matériel neuf destiné à être utilisé en Atmosphères Explosives désigné ci-après:
(The company **Oldham S.A.S.***, ZI Est 62000 Arras France, declares that the following new material intended for use in Explosive Atmospheres:)*

Détecteur de gaz *(Gas detector)* type OLCT 10N

est conforme aux exigences des Directives Européennes suivantes *(complies with the requirements of the following European Directives)*:

I) Directive Européenne ATEX 94/9/CE du 23/03/94 : Atmosphères Explosives
(ATEX 94/9/CE European Directive dated from 23/03/94: Explosive Atmospheres)

N° de l'Attestation CE de type du matériel : *(EC Type Examination Certificate number)*	**INERIS 11ATEX3023X**
Normes européennes harmonisées et internationales : *(Harmonized European and international standards)*	**EN 60079-0 : 2009 / IEC 60079-0 : 2007** **EN 60079-15 : 2010 / IEC 60079-15 : 2010** **EN 60079-31 : 2009 / IEC 60079-31 : 2008**
Détecteurs de gaz combustibles OLCT 10N *(OLCT 10N for detection of combustible gases)*	**II 3 GD** **-20°C <Ta< +55°C** **Ex nA nC IIC T4 Gc** **Ex tc IIIC T135°C Dc** **IP 65**
Détecteurs de gaz toxiques et de l'oxygène OLCT 10N *(OLCT 10N for detection of toxic gases and oxygen)* sauf versions CO_2 *(except CO_2 versions)*	**II 3 GD** **-20°C <Ta< +55°C** **Ex nA IIC T4 Gc** **Ex tc IIIC T135°C Dc** **IP 65**
Délivrés par l'Organisme Notifié sous le numéro 0080 : *(Issued by the Notified Boby #0080)*	**INERIS, rue Taffanel** **60550 Verneuil en Halatte, France**

II) Directive Européenne CEM 2004/108/CE du 15/12/04: Compatibilité Electromagnétique
(2004/108/CE EMC European Directive dated from 15/12/2004: Electromagnetic compatibility)

Norme harmonisée appliquée : *(Harmonised European standard)*	**EN 50270 : 2006 (Type 1)**

CE/ATEX – OLCT 10N-rev e

Arras, le 17 avril 2015 (April 17th, 2015)

ISO 9001:2008 CERTIFIE
ISO 14001:2004 CERTIFIE

Oldham S.A.S.
Z.I. EST – C.S. 20417
62027 ARRAS Cedex – FRANCE
www.oldhamgas.com

Michel Spellemaeker
Global Director of Product Management

Chapter 7 | Specifications

Detector

Dimensions	118x110x63 mm
Ingress protection	IP65
Enclosure	UV-resistant ABS
Cable entries	2 cable glands, M16, outer diameter 4 to 8 mm
Type of cable	Type MPI-22A
Power supply	12-30V
Consumption (under normal operating conditions @ 24 V)	Electrochemical sensor: 2.5 mA Catalytic sensor: 50 mA Infrared sensor: 20 mA
Status indication during calibration	LED red/green
Calibration	Non-intrusive and automatic (with the special magnetic calibration cap) or manual calibration (by potentiometer) Standard gas value set by the detector
ATEX certification temperature	Certified for use in ATEX zones between -20°C and +55°C
Humidity	15 to 90% RH for the electrochemical sensor 0 to 100% RH uncondensed for the catalytic sensor
Storage conditions	Electrochemical sensor: 4 to 20°C 20 to 60% RH 1 bar ± 10% 6 months maximum Infrared sensor: 4 to 20°C 10 to 60% RH 1 bar ± 10% 6 months maximum Catalytic sensor: -50 to +70°C 20 – 60% RH 1 bar ± 10% 6 months maximum

Certification	EMC according to EN 50270:2006 (Type 1) Explosive Atmospheres : II 3 GD Ex nA nC IIC T4 Gc for LEL versions Ex nA IIC T4 Gc for Toxic (except CO_2 versions) and O2 versions Ex tc IIIC T135°C Dc -20°C<Ta<+55°C

Sensor specifications

Gas Type	Measuring range (ppm)	Temp. Range (°C)	Accuracy	Average Life Expectancy (month)	T_{50} / T_{90} (sec)
CH_4 Methane	0-100% LEL	-20 to +55	± 1% LEL (0-70% LEL)	48	6/15
H_2 Hydrogen	0-100% LEL	-20 to +55	± 1% LEL (0-70% LEL)	48	
C_3H_8 Propane	0-100% LEL	-20 to +55	± 1% LEL (0-70% LEL)	48	
C_4H_{10} Butane	0-100% LEL	-20 to +55	± 1% LEL (0-70% LEL)	48	
CO Carbon monoxide	300 1000	-20 to +50	± 3%	36	15/40
CO_2 Carbon dioxide	5000 0-5% vol. 0-100% vol.	-40 to +50	± 3%	60	18/32 19/33 13/22
H_2S Hydrogen sulfide	30 100	-20 to +50	± 3%	36	15/30

NH_3 Ammonia	100 1000	-20 to +40	± 5 ppm ± 20 ppm	24	25/70 20/60
NO Nitric oxide	100 300	-20 to +50	± 3%	36	10/30
NO_2 Nitrogen dioxide	10 30	-20 to +50	± 3%	24	30/60
O_2 (2 years) Oxygen	0-30 Vol.%	-20 to +50	0,4 Vol.% (15-22 %)	28	6/15
O_2 (5 years) Oxygen	0-30 Vol.%	-40 to +50	± 1.5%	60	15/25

Line length (use with MX 43)

The following table summarizes the maximum line lengths to be used according to the cross-section and number of sensors connected to a MX 43 controller.

TOX and O_2

With any MX 43 mother board version

Distance in meters	Line cross-section		
Number of OLCT 10N detectors used to detect toxic gases or oxygen (except CO_2 versions)	0.75 mm² (AWG 18)	0.5 mm² (AWG 20)	0.22 mm² (AWG 24)
10	1000	1000	1000
20	1000	1000	900
25	1000	1000	500
32	1000	800	300

CO_2

MX 43 with Rev. A or Rev. B mother board

Distance in meters	Line cross-section		
Number of OLCT 10N detectors used to detect CO_2	0.75 mm² (AWG 18)	0.5 mm² (AWG 20)	0.22 mm² (AWG 24)
1	1000	1000	1000
2	1000	1000	500
5	1000	600	250
10	550	300	125
12	450	250	100
Above 12	Maximum load for an MX 43 line (>500mA). An external supply must be used		

MX 43 with Rev. C mother board

Distance in meters	Line cross-section		
Number of OLCT 10N detectors used to detect CO_2)	0.75 mm² (AWG 18)	0.5 mm² (AWG 20)	0.22 mm² (AWG 24)
1	1000	1000	1000
2	1000	1000	500
5	1000	600	250
10	550	300	125
20	250	150	60
30	180	100	40
Above 30	Maximum load for an MX 43 line (>1200mA). An external supply must be used		

Catalytic

MX 43 with Rev. A or Rev. B mother board

Distance in meters	Line cross-section		
Number of OLCT 10N detectors equipped with a catalytic sensor (LEL versions)	0.75 mm² (AWG 18)	0.5 mm² (AWG 20)	0.22 mm² (AWG 24)
1	1000	1000	500
2	1000	600	250
3	750	400	180
4	600	330	150
5	450	250	100
Above 5	Maximum load for an MX 43 line (>500mA). An external supply must be used		

MX 43 with Rev. C mother board

Distance in meters	Line cross-section		
Number of OLCT 10N detectors equipped with a catalytic sensor (LEL versions)	0.75 mm² (AWG 18)	0.5 mm² (AWG 20)	0.22 mm² (AWG 24)
1	1000	1000	500
2	1000	600	250
3	600	400	180
4	450	300	150
5	350	250	100
6	300	200	100
7	250	175	75
8	225	150	50
9	200	125	50
10	175	100	50
13	125	75	30
Above 13	Maximum load for an MX 43 line (>1200mA). An external supply must be used		

Chapter 8 | Specific instructions for use in explosive atmospheres in accordance with European ATEX Directive 94/9/EC

General comments

OLCT 10N detectors comply with the requirements of European ATEX Directive 94/9/EC on Gas and Dust explosive atmospheres. OLCT 10N transmitter detectors are used to measure certain explosive or toxic gases or oxygen. They can be installed in ATEX zones 2 or 22 (except for CO_2 versions which should be installed in safe area only).

The equipment passed a mechanical shock test for low risk conditions and therefore must be protected against shock hazards in ATEX zones.

The information given in the following sections should be taken into account and observed by the manager of the site where the equipment is installed. Refer to European ATEX Directive 1999/92/EC on minimum requirements for improving the safety and health protection of workers potentially at risk from explosive atmospheres.

OLCT 10N detectors also comply with the requirements of the IECEx international certification scheme relating to Gas and Dust explosive atmospheres.

Marking for LEL versions

The marking will be as follows:

OLDHAM Arras
OLCT 10N EXPLO
CE

II 3 GD

Ex nA nC IIC T4 Gc
Ex tc IIIC T135°C Dc
IP 65
Amb. Temp.: -20°C to +55°C
INERIS 11ATEX3023X
IECEx INE 11.0029X

Warning: Do not open when an explosive atmosphere may be present.
Potential electrostatic charge hazard. Polish or wipe only with damp cloth.

Avertissement: Ne pas ouvrir si une atmosphère explosive peut être présente
Danger potentiel de charges électrostatiques. Ne frotter ou n'essuyer qu'avec un chiffon humide.

Marking for toxic gas or oxygen detector versions

The marking will be as follows:

OLDHAM Arras
OLCT 10N TOX
CE

II 3 GD

Ex nA IIC T4 Gc
Ex tc IIIC T135°C Dc
IP 65
Amb. Temp.: -20°C to +55°C
INERIS 11ATEX3023X
IECEx INE 11.0029X

Warning: Do not open when an explosive atmosphere may be present.
Potential electrostatic charge hazard. Polish or wipe only with damp cloth.
Avertissement: Ne pas ouvrir si une atmosphère explosive peut être présente
Danger potentiel de charges électrostatiques. Ne frotter ou n'essuyer qu'avec un chiffon humide.

CO_2 versions are not certified to use in ATEX area

OLDHAM

The Fixed Gas Detection Experts

EUROPEAN PLANT AND OFFICES

Z.I. Est – rue Orfila CS 20417 – 62027 Arras Cedex FRANCE
Tél: +33 (0)3 21 60 80 80 – Fax: +33 (0)3 21 60 80 00
Website: http://www.oldhamgas.com

AMERICAS
Tel: +1-713-559-9280
Fax: +1-281-292-2860
americas@oldhamgas.com

ASIA PACIFIC
Tel: +86-21-3127-6373
Fax: +86-21-3127-6365
sales@oldhamgas.com

EUROPE
Tel: +33-321-608-080
Fax: +33-321-608-000
info@oldhamgas.com